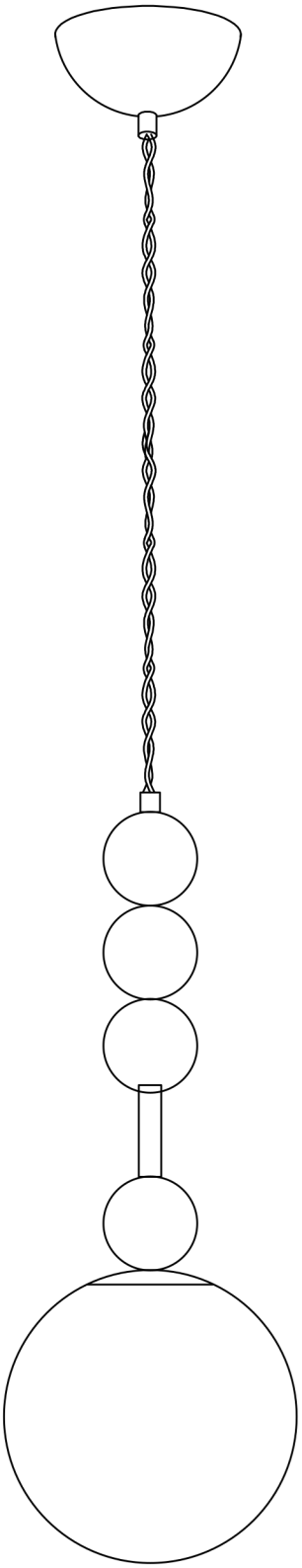

1

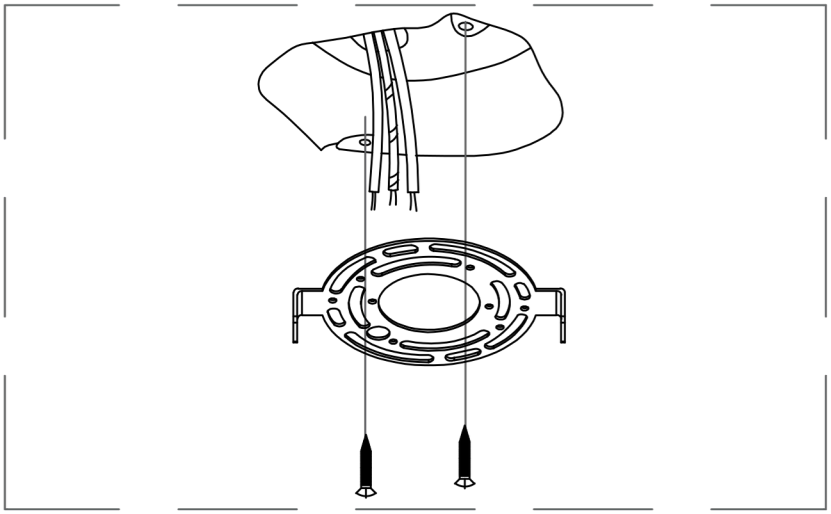

Fasten the hanging board to the ceiling with screws

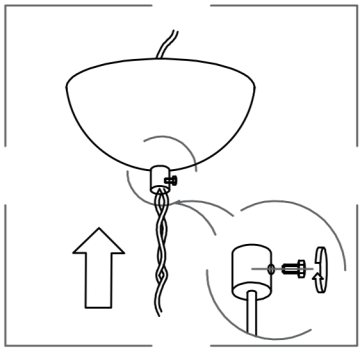

After adjusting the line length, fix it with screws.

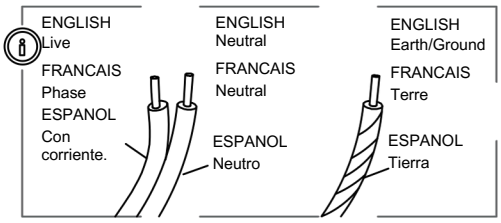

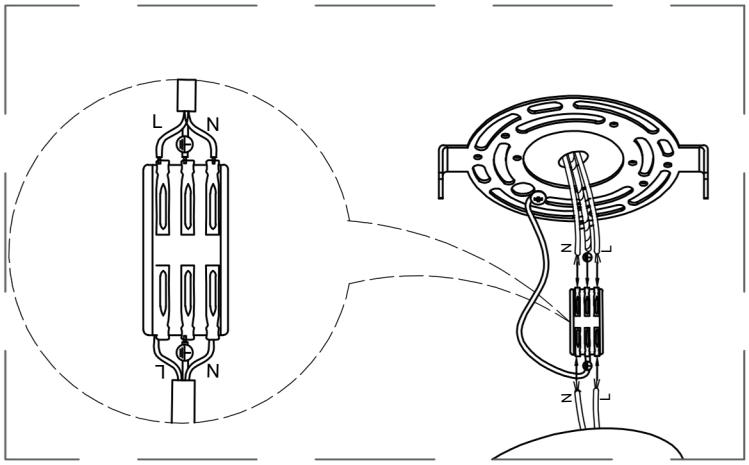

The wires in the home are connected to the wires in the lamps through the wire terminals

2

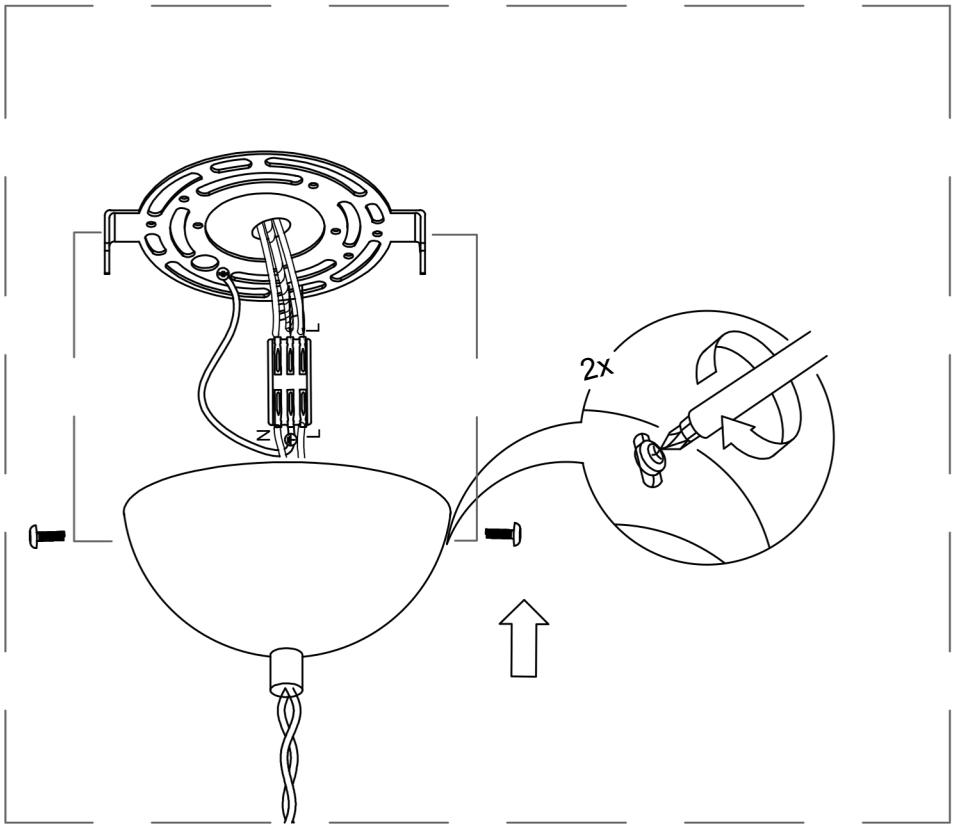

The side screws fix the lamp body to the ceiling plate

3

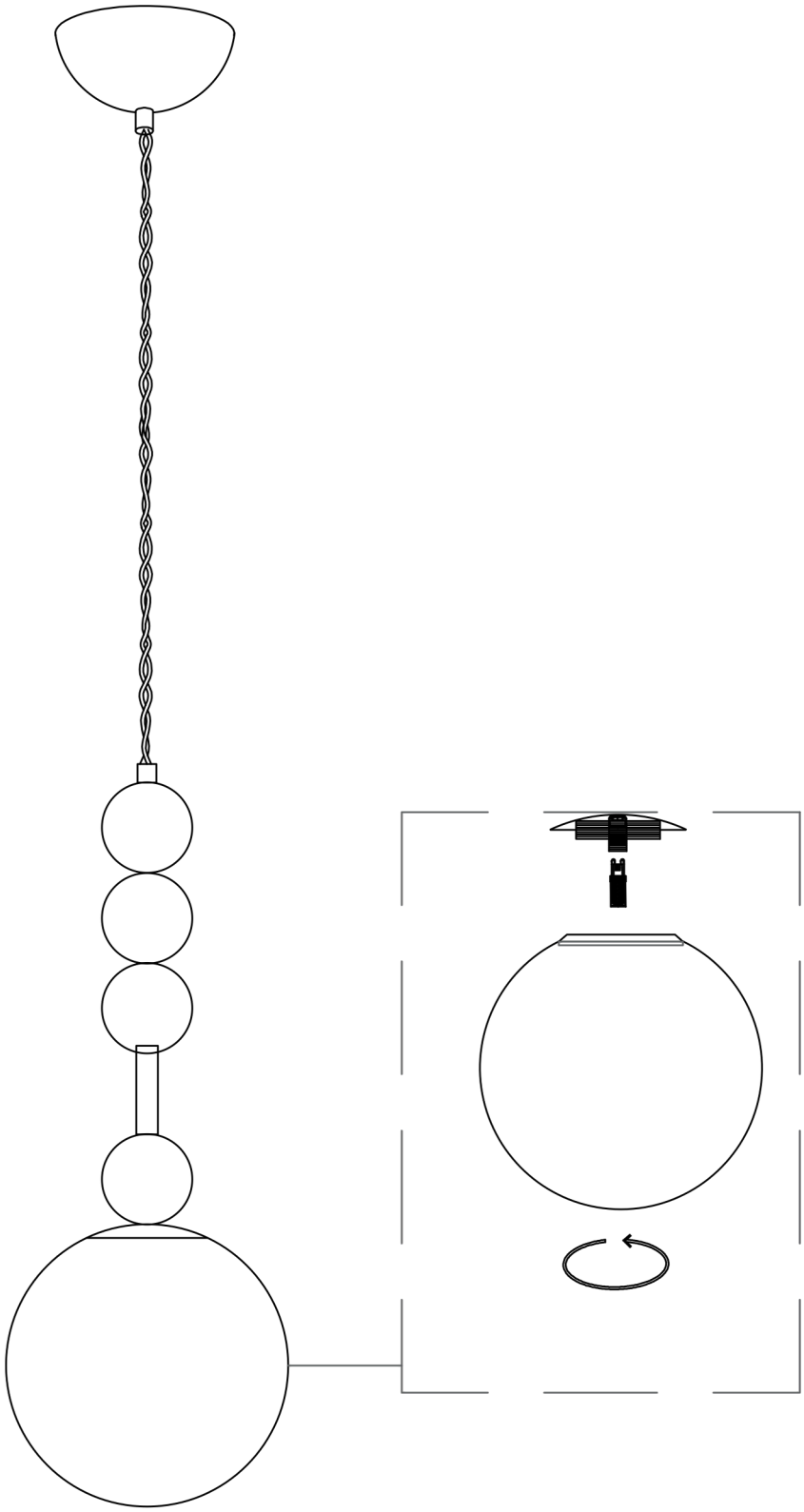

Installing light source and lampshade